DRG No 8770-A-50

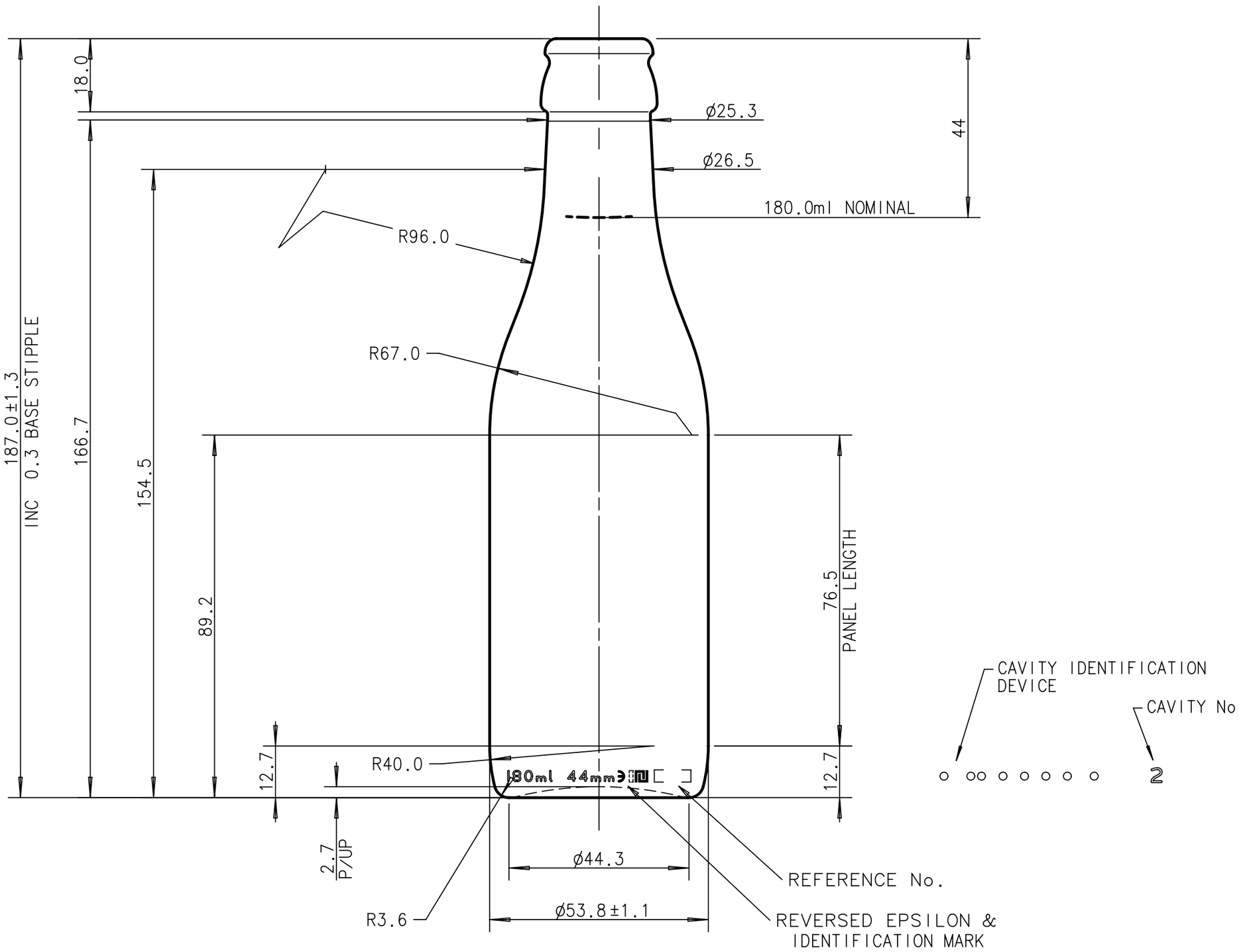

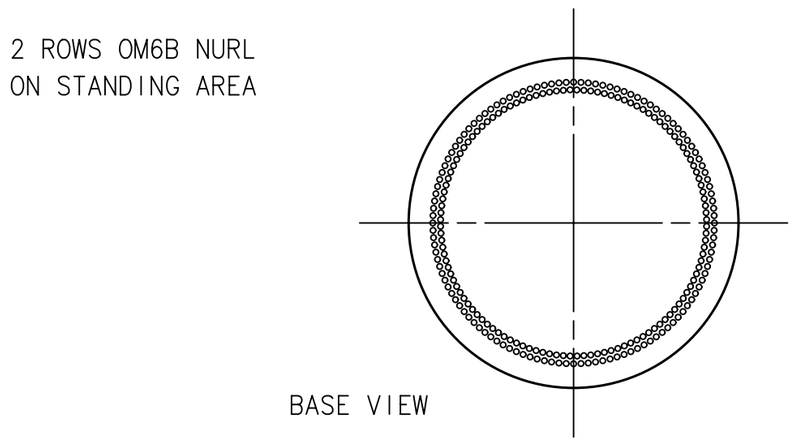

NOTES:

INSWEEP LETTERING TO BE
3.0mm HIGH. 0.2 PROUD,
ROUND BOTTOM STYLE

ALL DIMENSIONS ARE IN MILLIMETERS

GLASS COLOUR	FLINT
VACUITY	11.0ml (6.1%)
FILL LEVEL	44

MEASURING CONTAINER	
MINIMUM THROUGH BORE	15.5
TILT ANGLE	18.4°
MAXIMUM CARBONATION AT 20°C (BARS)	5.3
MAX VERTICAL LOAD	6000N

	REVISION	DATE	CHK	DRC
G				
F				
E				
D				
C				
B				
A	AW-0180-0007A CONVERTED TO WARE SPECIFICATION SG	29/11/04	TB	DB

NOMINAL CAPACITY	180.0ml ± 2.8ml	℮ ± 5.4ml
WEIGHT NOMINAL	280g	HUF=169.2
FINISH	RF30058 - Crown Cetie GME 13.01	
SURFACE TREATMENT	HOT END - YES	COLD END - YES

SPECIFICATION AGREEMENTS ARE BASED ON TOLERANCED DIMENSIONS ONLY
DO NOT SCALE DRAWING
COPYRIGHT RESERVED,NOT TO BE COPIED IN WHOLE OR PART WITHOUT
WRITTEN PERMISSION FROM ROCKWARE GLASS LTD.

Rockware GLASS PACKAGING TECHNOLOGY

180ml RETURNABLE

CUSTOMER. BRITVIC SOFT DRINKS

DRAWN. TB	DATE 11/10/04
CHECKED. TB	D.R.C. DB

SCALE	DRAWING No	A2
FULL SIZE	8770-A-50	